AguaClara Cornell Floc Modeling

Spring 2026: Mid-Semester Report

Alex Gardocki (rag325), Lauren Hsu (lkh58), Sarvesh Prabhu (sp2572), Aaron Gu (ag2698), Irene Ma (im398), Aronya Sarker (as4447)

March 13, 2026

Abstract

The Floc Modeling subteam aims to further our understanding of the mechanics of floc formation and clarification through the development of a mathematical model of these processes. This semester, Floc Modeling is evaluating the distribution of flocs within the clarifier to support or refute the clarification model assumption that floc saturation is distributed uniformly throughout the floc filter. To analyze floc distribution experimentally, we are employing dye tracers to track their formation and movement within the floc filter. In addition, we are revising the current clarification model and its derivations to better describe how primary particles are removed as water travels through the floc filter. The results of these efforts will help evaluate our current understanding of flocculation and clarification, and guide future improvements to both the experimental system and the clarification model.

Introduction

Flocculation and clarification are critical to the AguaClara treatment process as they remove most primary particles before filtration and chlorination. While these processes are widely used throughout the water treatment industry, gaps remain in our understanding of their underlying physical mechanisms. This lack of understanding has made it challenging to optimize the design of treatment plants and develop automated systems that can successfully respond to fluctuating conditions. It has also prevented the widespread adoption of the novel floc filter technology used in AguaClara plants during clarification. For these reasons, an accurate mathematical model of these processes is essential.

This semester, the Floc Modeling subteam is focusing its efforts on refining the AguaClara clarification model. Clarification is the process following flocculation in which flocs are separated from treated water through settling, also known as sedimentation. During conventional clarification, sedimentation is the sole mechanism for particle removal. However, AguaClara plants utilize an additional process called floc sweeping. Floc sweeping allows previously formed flocs to capture additional primary particles that would settle too slowly on their own, increasing the overall efficiency of clarification. In order to achieve this, vertical jets of water are used to maintain a suspension of flocs known as the floc filter. Primary particles travel up through this suspension, colliding and aggregating with the suspended flocs, which can then be removed. Smaller flocs travel up towards a set of plate settlers, which aggregate these small flocs into larger ones that eventually settle back into the floc filter.

Floc sweeping efficiency depends on coagulant dose, floc filter concentration, and floc saturation. Flocs are initially very porous; as a floc captures primary particles, its pores fill. Eventually, a floc cannot capture any additional particles. Floc saturation is a measurement characterizing how “full” a floc is and how many more particles it is able to capture. Spatial variations in floc saturation within the clarifier can affect particle removal efficiency in the clarifier. If a mathematical model can predict the spatial distribution of flocs in the clarifier, then the areas of the clarifier with the most saturated flocs can be targeted first during wasting. Thus, only flocs that are still capable of capturing primary particles will remain in the clarifier, increasing clarification efficiency.

Modeling clarifier performance is crucial for determining accurate and efficient coagulant dosages because coagulant directly influences floc formation, floc size, and the rate of particle removal. Coagulant doses that are too low fail to neutralize particles, and primary particles fail to aggregate, leading to poor floc formation and higher effluent turbidity. In contrast, coagulant doses that are too high can cause charge reversal, causing particles to repel each other and remain suspended. Additionally, the excess coagulant contributes to increased sludge production and higher operation costs. Both overdosing and underdosing coagulants lead to poor floc formation, higher operating costs, and longer treatment times. Therefore, to maximize performance and reduce costs, it’s crucial to model clarifier performance in order to determine the correct coagulant doses.

Literature Review & Previous Work

Previous Work

In Fall 2025, the team investigated the use of dye tracers to visualize floc behavior within the mini clarifier. The two dyes evaluated were Red-40 and methylene blue. Red-40 was tested first because it is an anionic dye that could potentially adsorb onto the positively charged PACl. Jar tests were conducted to determine the concentrations of clay, coagulant, and dye that would produce distinguishable flocs without too much residual dye in solution. Results showed that while Red-40 could produce visible flocs, a significant amount of the dye remained dissolved in solution even at the lowest concentrations that still made visible flocs. This residual dye adsorbed onto other flocs within the system, which caused the entire floc filter to be colored red and made it impossible to distinguish tracer flocs from non-tracer flocs, even when flocs did still form successfully.

Because of this limitation, methylene blue was evaluated as an alternative tracer dye. Methylene blue is a cationic dye that adsorbs strongly onto the negatively charged kaolin clay particles. As such, the methylene blue was mixed with clay before adding PACl during jar tests, effectively making ‘methylene blue-dyed clay particles’ that are turned into flocs instead of first making flocs that are then dyed with Red-40. In these experiments, the methylene blue dye strongly attached to the clay and was substantially removed from solution during floc formation. As a result, the flocs formed were visually distinguishable while the surrounding water remained

mostly clear. Based on these observations, it was concluded that methylene blue was the more viable tracer dye to use for future experiments.

During the Fall 2025 experiments there were several issues identified in the existing mini clarifier design. The original clarifier had sampling ports along its side and a floc hopper with a flat bottom. Over time, the mini clarifier also began to leak significantly, which reduced the reliability of the experiments performed. To address these issues, several revisions were made to the mini clarifier.

First, the side sampling ports were removed to reduce potential leakage points. Second, a lip was added around the clarifier body to improve the seal between the acrylic and the main body. Third, the floc hopper was modified to have a downward-sloping bottom to help sludge move toward the waste outlet. These modifications were incorporated into a new clarifier design for future experiments.

Floc Filter Imaging

Hurst et al. (2014) developed a methodology for measuring suspended solids concentration within a floc blanket using image analysis, providing a non-destructive method that captures spatial and temporal variations in floc concentration across the entire reactor. In their setup, a backlit reactor and camera system were used to measure the attenuation of light transmitted through the suspension, which was then converted into local solids concentration using calibrated relationships between light attenuation and particle concentration.

This approach allowed concentration measurements to be obtained for each pixel of the image, enabling high-resolution mapping of the floc blanket structure rather than relying on discrete grab samples. As a result, image analysis offered significantly improved spatial and temporal resolution in characterizing suspended solids dynamics within the reactor.

This methodology directly informed the approach used by our subteam to analyze the spatial distribution of flocs and evaluate the assumption that floc saturation is uniform throughout the floc filter. Rather than measuring solids concentration directly as in Hurst et al. (2014), our work adapts the same imaging principle to observe the movement and distribution of tracer flocs within the clarifier. By tracking dyed flocs within the floc filter, the experiment aims to qualitatively and eventually quantitatively assess how flocs are distributed vertically within the clarifier and whether saturation varies with height. This adaptation builds on the precedent established by Hurst et al. by using imaging as a tool to capture spatial variability in floc behavior, but shifts the focus from measuring concentration to evaluating the uniformity of floc saturation within the clarifier.

Clarification Modeling

Pennock et al. (2018) links hydraulic flocculation to the settled effluent turbidity using two different logarithmic models connecting the influent and effluent turbidity of laminar and turbulent flows. When flocculation occurs in turbulent flow, the relative velocities between primary particles are controlled by inertial forces, but when the flow is laminar, viscous forces

control the relative velocities between particles. Both models lead to logarithmic equations relating influent turbidity to effluent turbidity, but the viscous flocculation model is preferred due to the widespread use of $\bar{G}\theta$ as opposed to $\varepsilon^{-1/3}\theta$. Additionally, in the 2018 paper, k is a fitted parameter that is determined experimentally to combine different variables like mixing efficiency, particle collision frequency, and flocculation time into one parameter.

Pennock et al. (2023) expands on this model by redefining the parameter k to explicitly link hydraulic flocculation with sedimentation performance. The parameter k represents the sedimentation capture velocity and can be used to determine how changes in capture velocity affect sedimentation performance. This allows operators to predict flocculation performance and the particle size distribution in the clarifier influent turbidity. This model is more predictive and can be used to optimize the clarifier design.

A key difference between the Pennock model and the floc filter clarification model is how particle removal occurs. In the Pennock model, particle removal occurs due to differences in particle settling velocity relative to the upward flow velocity. Particles that settle faster than the capture velocity are removed as they come in contact with and slide down the plates. The floc filter clarification model, on the other hand, focuses on the interactions between primary particles and the floc filter. As primary particles travel up the clarifier, they collide with the suspended flocs, causing those primary particles to attach to the flocs and be removed.

Part I: Experimentation

Methods

<u>Experimental Apparatus</u>

For our experiments, we used a tube flocculator paired with the low hydraulic residence time model clarifier developed by the Summer 2025 team. The tube flocculator had a radius of curvature of 42 mm and an inner diameter of 4.381 mm. Based on calculations described by Tse et al. (2011), at a flow rate of 1.2 mL/s, this gave a velocity gradient of G = 145 Hz. This flow rate also gave a hydraulic residence time of θ = 304 seconds.

The parameters of the clarifier were chosen to mimic the characteristics of an actual AguaClara clarifier. The cross-sectional area of the clarifier was designed to be 1200 mm^2 in order to achieve an upflow velocity of 1 mm/s given a flow rate of 1.2 mL/s since this is the upflow velocity used in AguaClara plants (Weber-Shirk, n.d.). The average initial velocity at the jet was 17 mm/s based on the cross-sectional area of the jet inlet, which was 71 mm^2. This larger initial velocity ensured the jet would have sufficient momentum to keep the floc filter suspended.

For the plate settlers, a spacing of 1 cm between plates was chosen to avoid floc rollup. Using the equation found in the AguaClara textbook (Weber-Shirk, n.d.), we calculated the necessary plate settler length to be 14.67 cm to ensure the AguaClara standard capture velocity of 0.12 mm/s. However, due to limitations in print size, we chose to reduce the length to 7.33 cm, resulting in a capture velocity of 0.21 mm/s. A plate width of 2.0 mm was chosen to balance the integrity of the print with having the thinnest plates possible to reduce the increase in upflow

velocity through the plate settlers. The plates were placed at a 60º angle based on AguaClara clarifier specifications (Weber-Shirk, n.d.). The area above the plate settlers was left open to the air to prevent air bubbles from being trapped in a closed system.

During operation, coagulant and a turbidity source (typically white kaolin clay) were first added to the influent of the tube flocculator. After exiting the flocculator, the newly formed flocs were directed into the clarifier. The jet reverse maintained these flocs in suspension in order to form a floc filter within the clarifier. Excess flocs were removed via a floc hopper, which drained flocs from the floc filter once they reached a height of 124 mm above the diffuser.

Apparatus Revisions

To improve the adhesion of the front acrylic plate and the clarifier body, a lip was added, as seen in Figure 1. The lip protrudes from the edges of the clarifier body to ensure that the acrylic plate sits flush with the clarifier top and bottom. This adjustment reduces the potential for leakage. Additionally, the floc hopper floor was extended to slope downwards. This encourages wasted sediment to flow downwards into the waste port and prevents clogging and buildup of flocs in the floc filter. Sampling ports were removed due to difficulty in use and the possibility of leakage.

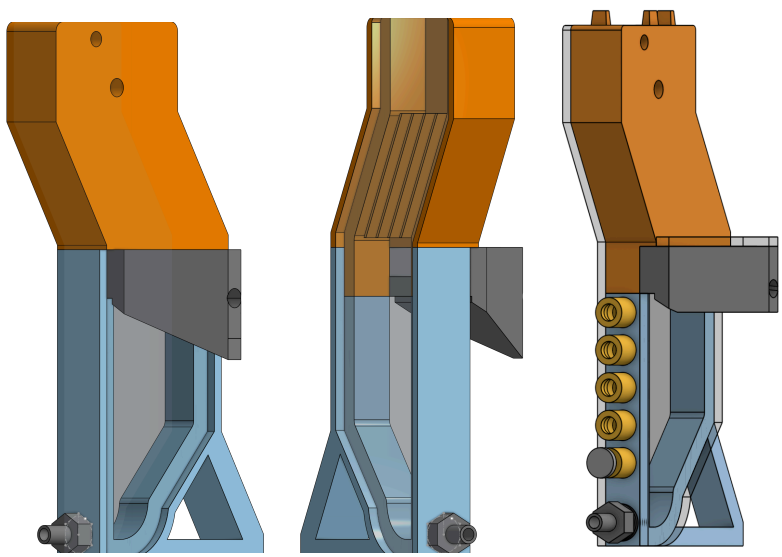

Figure 1. Downward sloping floc hopper and sample ports removed in revised clarifier (left), lip added to clarifier body surrounding acrylic plate (middle), and old clarifier with sampling ports, flat-bottomed floc hopper, and no lip (right).

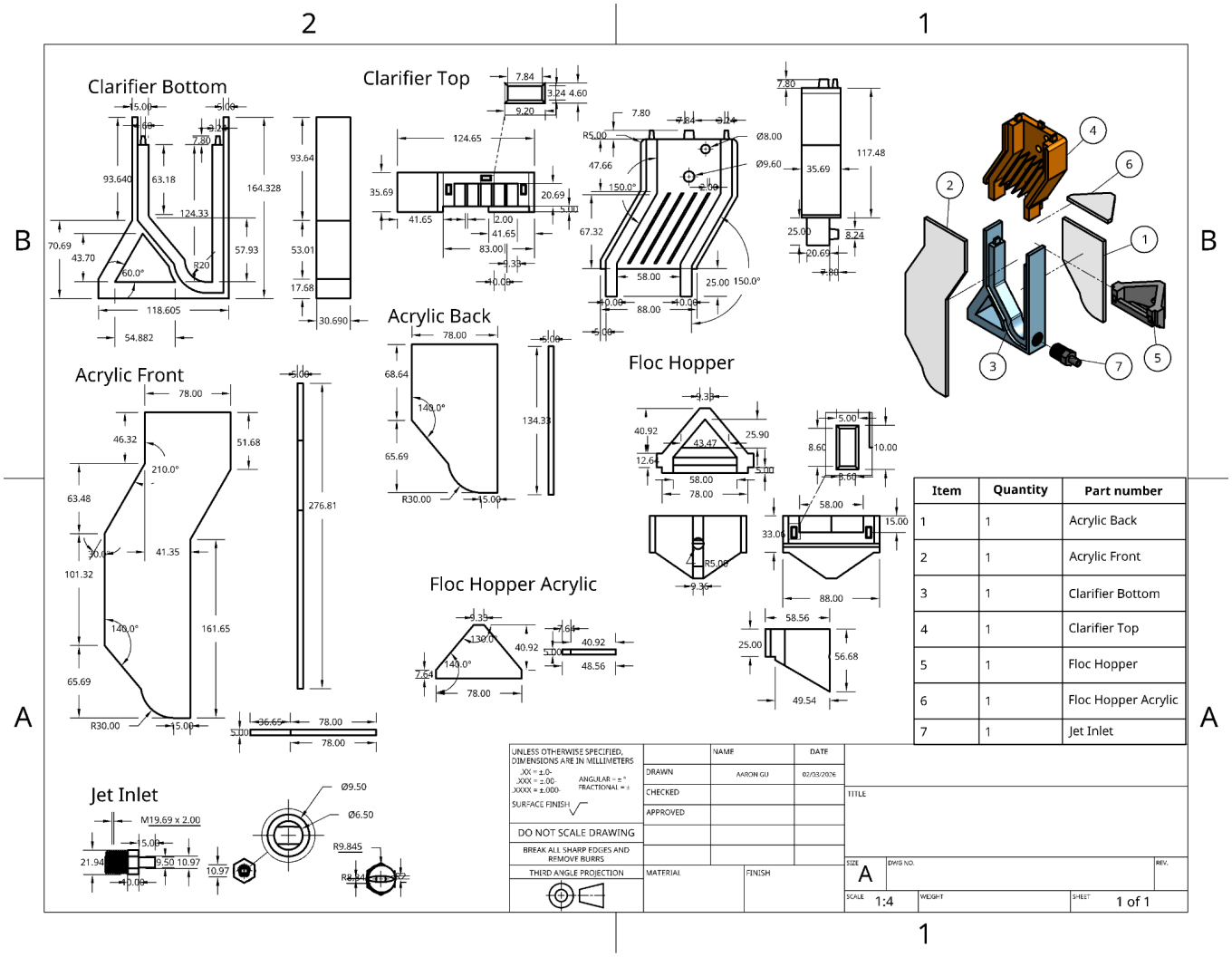

Figure 2. Full drawing of new clarifier design, including measurements and exploded view.

Discussion

Unfortunately, due to delays in the printing and fabrication of the new mini clarifier, we were unable to run any new experiments using methylene blue dyed flocs in the new clarifier. This will be the primary focus of future experimental work this semester.

Part II: Clarification Modeling

Methods

<u>Discretized</u>

Clarification was initially modelled by dividing the floc filter into horizontal slices along its full height. However, this approach assumes that the concentration of primary particles is

horizontally uniform at each particular height. In actuality, primary particle concentration can vary significantly from one side of the clarifier to the other.

Thus, the floc filter clarification model was derived by visualizing the floc filter as a grid of boxes, with each box representing a discrete cube anchored by a single floc. The full derivation is shown here; see Appendix Section III for variable definitions. The main assumption is that the path of primary particles is predominantly straight upwards, with negligible horizontal displacement relative to the floc separation distance.

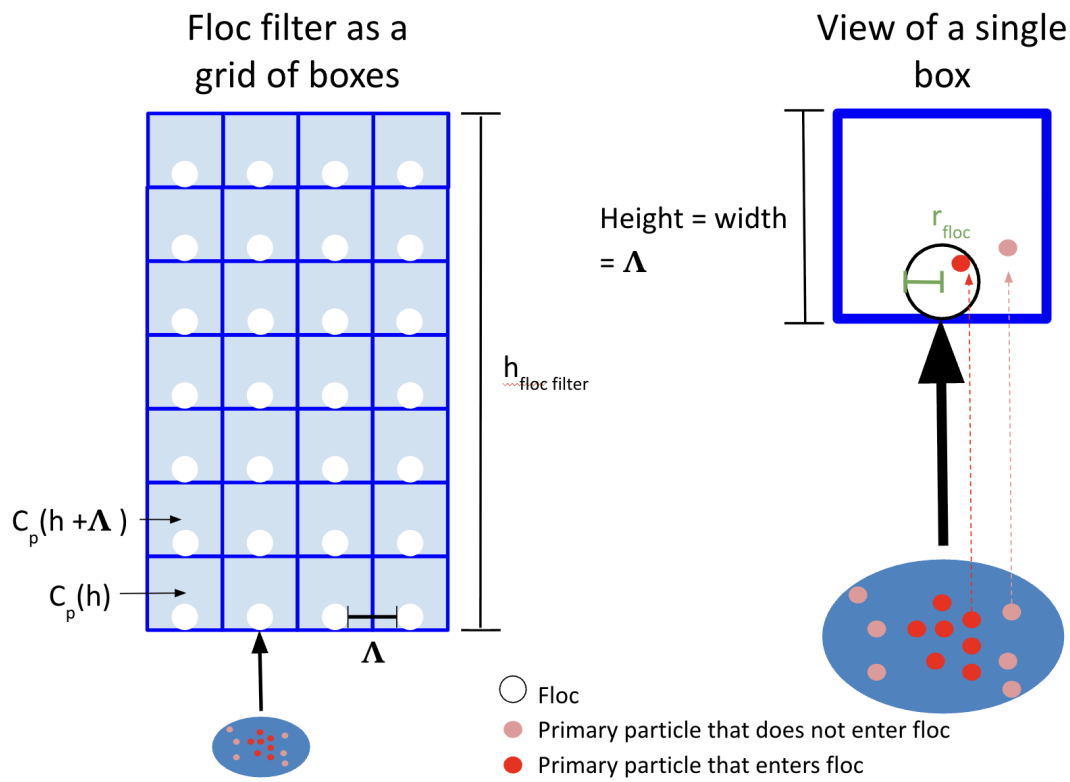

Figure 3. Diagram of the discretized floc filter model.

The concentration of primary particles removed from a single box is defined in Equation 1. The mass flow of primary particles to the floc can be visualized as follows in Figure 4: the floc area in the box can be projected along the box height, creating a cylinder of volume $\pi r^2_{floc}\ \Lambda$. Thus, during the time that it takes for a primary particle to travel the height of the box, the mass flow of primary particles to the floc is simply the number of primary particles that can fit in that cylinder.

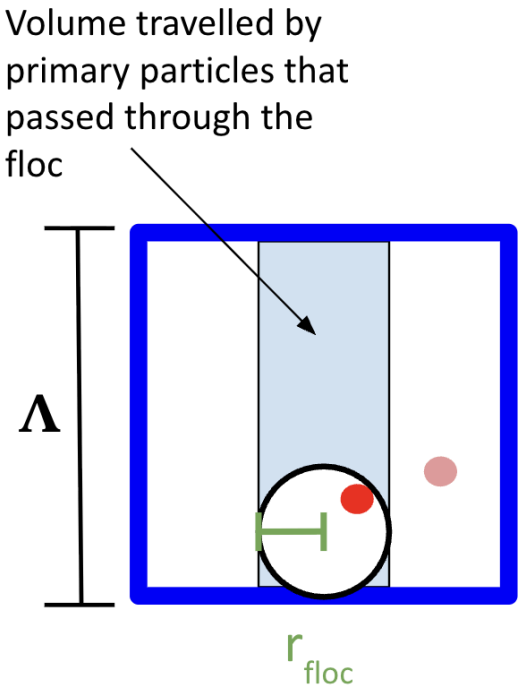

Figure 4. Volume of primary particles through one floc.

$$C_{removed} = \frac{[attachment\ efficiency][Mass\ flow\ of\ primary\ particle\ to\ floc][\#\ of\ flocs\ in\ box]}{[Volume\ of\ box]} = \frac{\alpha\pi r^2_{floc}\ C_p(h)}{\Lambda^2} \tag{1}$$

A box at height h has a primary particle concentration of $C_p(h)$ and removes $C_{removed}$ concentration of primary particles. Thus, the next box directly above, at height h + **Λ**, has a concentration of primary particles shown in Equation 2.

$$C_p(h + \Lambda) = C_p(h) - C_{removed} = C_p(h)\,(1 - \frac{\alpha\pi r^2_{floc}}{\Lambda^2}) \tag{2}$$

Equation 2 was simplified by rewriting **Λ** in terms of C_{floc} and m_{floc}. A further simplification was made by grouping C_{floc}, m_{floc}, and r_{floc} terms into the floc volume fraction ϕ_{floc}, yielding Equation 3.

$$C_p(h + \Lambda) = C_p(h)\,[1 - \alpha\pi(\frac{3\phi_{floc}}{4\pi})^{2/3}] \tag{3}$$

By repeating this process for a column of boxes across the entire height of the clarifier, we get Equation 4 from applying a geometric series. Equation 4 relates the concentration of primary particles before clarification, $C_{flocculated}$, to that after clarification, $C_{clarified}$.

$$C_{clarified} = C_{flocculated}\left[1 - \alpha\pi\left(\frac{3\phi_{floc}}{4\pi}\right)^{2/3}\right]^{h_{floc\ filter}/\Lambda} \tag{4}$$

<u>Continuous</u>

We also considered a continuous model that used a frequency f to describe the rate of removal of primary particles with respect to vertical distance traveled through a floc. By multiplying this frequency by the volume fraction of flocs times the concentration of primary particles and integrating over the height of the floc filter, we obtain the total concentration of primary particles removed.

In order to obtain the removal frequency f, we consider slicing a floc into infinitesimally thin horizontal strips which primary particles will have to travel through vertically. At each strip, the fraction of primary particles removed should be $f\Delta h$, where Δh is the height of each strip. Integrating this expression over the height of the floc should give us the attachment efficiency, which yields Equation 5.

$$\alpha = \int_0^{2r_{floc}} f\, dh \tag{5}$$

Since f is independent of height, we obtain the simple relationship

$$f = \frac{\alpha}{2r_{floc}} \tag{6}$$

Now, by imagining the flocs as a probability cloud across the floc filter, we can use this result to determine the total concentration of primary particles removed throughout the floc filter. Assuming a uniform distribution of flocs, the probability that a floc will be present at any given position in the floc filter is simply equal to the floc volume fraction ϕ_{floc}. Hence, our rate of primary particle concentration removal at height h in the floc filter is

$$\frac{dC_p(h)}{dh} = C_p(h)\phi_{floc}f \tag{7}$$

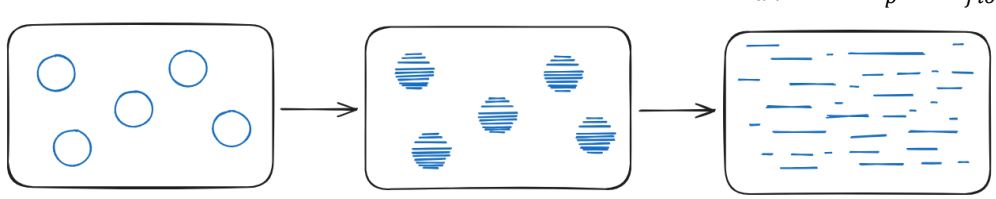

Figure 6. Individual flocs are divided into infinitesimal horizontal slices, then abstracted into a probability cloud to allow for integration.

We can use separation of variables to integrate this rate and obtain the change in primary particle concentration.

$$\int_{C_{flocculated}}^{C_{clarified}} \frac{dC_p}{C_p} = \int_0^{h_{floc\,filter}} \phi_{floc} f \, dh \tag{8}$$

Rearranging gives the following expression for the clarified primary particle concentration.

$$C_{clarified} = C_{flocculated} exp(h_{floc\,filter} \phi_{floc} f) = C_{flocculated} exp(h_{floc\,filter} \phi_{floc} \frac{\alpha}{2r_{floc}}) \tag{9}$$

This method unfortunately suffers from the same issue as our original approach to the discretized model: it assumes that primary particle concentration is horizontally uniform at any given height in the floc filter. However, it does offer potential advantages. For an extremely dense floc filter where the floc separation distance is small, it may not make sense to consider the floc filter as a collection of spherical suspended particles. Using f instead of α may do a better job of capturing this reality, and modifying the relationship between α and f allows us to account for irregularly shaped flocs and factor in floc fractal dimension. This is an area for further research and exploration.

Future Work

The dye methylene blue will be used as a tracer dye in future clarification experiments due to its cationic character and favorable absorption onto raw kaolin clay. Although the optimal dosages of coagulant still need to be determined, successful jar tests with methylene blue from Fall ‘25 have demonstrated that methylene blue dyed flocs are clearly visible with minimal dye seepage into water. With the newly modified model clarifier, tests for floc saturation will be implemented using methylene blue dyed tracer flocs. Initial analysis of floc spatial distribution will be mainly qualitative, but eventually, image processing and analysis will be used to quantitatively describe the spatial distribution of tracer flocs.

Additional future work will focus on validating the newly developed and revised floc filter clarification models. Data obtained from log books in Honduras as well as experiments run in the lab using the mini clarifier will be used to test if the models are able to accurately depict primary particle removal while maintaining sensible values for constants and other parameters. Once validated, these models can be incorporated into the ACDC dosing algorithm to aid in automated dosing performance for AguaClara plants.

Appendix

Section I: Spring 2024 Clarification Model

Writeup of Vertical Clarifier Floc Sweeping Equation Derivation from SP24

Section II: Spring 2025 Clarification Model

Writeup of Clarifier Floc Equation Derivation - SP25 and Summer

Section III: Variable Definitions for Floc Filter Model

$C_{removed} = concentration\ of\ primary\ particles\ removed$

$\Lambda = floc\ separation\ distance$

$N_{floc} = numerical\ floc\ density$

$C_P(h) = concentration\ of\ primary\ particles\ at\ height\ h\ in\ the\ clarifier$

$r_{floc} = radius\ of\ a\ floc$

$m_{floc} = mass\ of\ a\ floc$

$C_{floc} = concentration\ of\ flocs\ in\ clarifier$

$\alpha = attachment\ efficiency$

$\phi_{floc} = volume\ fraction\ of\ floc$

$C_{clarified} = concentration\ of\ primary\ particles\ after\ clarification$

$C_{flocculated} = concentration\ of\ primary\ particles\ after\ flocculation$

$h_{floc\ filter} = height\ of\ the\ floc\ filter$

$f = rate\ of\ primary\ particle\ removal\ with\ respect\ to\ distance\ traveled\ through\ floc$

References

Hurst, M., Weber-Shirk, M., & Lion, L. W. (2014b). Image analysis of floc blanket dynamics: Investigation of floc blanket thickening, growth, and steady state. *Journal of Environmental Engineering*, *140*(4). https://doi.org/10.1061/(asce)ee.1943-7870.0000817

Pennock, W. H., Weber-Shirk, M. L., & Lion, L. W. (2018). A hydrodynamic and surface coverage model capable of predicting settled effluent turbidity subsequent to hydraulic flocculation. *Environmental Engineering Science*, *35*(12), 1273–1285. https://doi.org/10.1089/ees.2017.0332

Pennock, W. H., Lion, L. W., & Weber-Shirk, M. L. (2023). Simple model for coupled hydraulic flocculation-sedimentation performance. *Journal of Environmental Engineering*, *149*(12). https://doi.org/10.1061/joeedu.eeeng-7384

Tse, I. C., Swetland, K., Weber-Shirk, M. L., & Lion, L. W. (2011). Method for quantitative analysis of flocculation performance. *Water Research*, *45*(10), 3075–3084. https://doi.org/10.1016/j.watres.2011.03.021

Weber-Shirk, M. (n.d.). *The Physics Of Water Treatment Design.* https://aguaclara.github.io/Textbook/index.html